GEMÜ D480 Victoria

Butterfly valve with bare shaft

Features

- Available in large nominal sizes
- Bubble tight sealing, in accordance with EN 12266-1/P12, leak rate A
- Special materials for disc, seal and valve body
- Vulcanizable liner
- Abrasion-resistant version possible

Description

The GEMÜ D480 Victoria soft seated butterfly valve has a bare shaft. The butterfly valve is available in nominal sizes DN 25 Up to 1600 and in standard installation lengths ISO 5752/20 | EN 558-1/20 | API 609 category A (DIN 3202 K1) in wafer and lug body versions.

Technical specifications

- **Media temperature:** -60 to 210 °C
- **Ambient temperature:** -40 Up to 70 °C
- **Operating pressure :** 0 Up to 16 bar
- **Nominal sizes:** DN 25 to 1600
- **Housing configurations:** Lug I U section I Wafer
- **Connection standards :** ANSI I AS I ASME I AWWA I BS I DIN I EN I ISO I JIS
- **Body materials:** ASTM I EN-AC-46100, aluminium casting material I EN-AC-47100, aluminium casting material I EN-GJL-250 I EN-GJS-400-15, SG iron material I EN-GJS-400-18-LT, SG iron material I S275JR, cast steel material with epoxy coating
- **Body coating:** Epoxy
- **Liner materials:** CSM (Hypalon®) I ECO I EPDM I FKM I NBR I SBR, abrasion resistant I Silicone
- **Disc materials:** 1.4408, investment casting material I 1.4469, Duplex cast steel material I 1.4539 I 2.0975, bronze casting material I EN-GJS-400-15, SG iron material
- **Disc coating:** EPDM I Epoxy I Halar® I NBR I Rilsan® I SBR
- **Conformities:** ACS I ATEX I DNV GL I DVGW Drinking water I DVGW Gas I EAC I FDA I WRAS

Technical data depends on the respective configuration

Product line

	GEMÜ D480 Victoria	**GEMÜ D481 Victoria**	**GEMÜ D487 Victoria**	**GEMÜ D488 Victoria**
Operation				
With bare shaft	●	-	-	-
manually	-	-	●	-
Pneumatic	-	●	-	-
Motorized	-	-	-	●
Nominal sizes	DN 25 Up to 1600	DN 25 Up to 1600	DN 25 Up to 1600	DN 25 Up to 1600
Media temperature	-60 Up to 210 °C	-60 Up to 210 °C	-60 Up to 210 °C	-60 Up to 210 °C
Operating pressure	0 Up to 16 bar	0 Up to 16 bar	0 Up to 16 bar	0 Up to 16 bar
Connection types				
Flange (lug)	●	●	●	●
Flange (U section)	●	●	●	●
Flange (wafer)	●	●	●	●
Conformities				
ACS	●	●	●	●
ATEX	●	-	-	-
DNV GL	●	●	●	●
DVGW Drinking water	●	●	●	●
DVGW Gas	●	●	●	●
EAC	●	●	●	●
FDA	●	●	●	●
WRAS	●	●	●	●

Product description

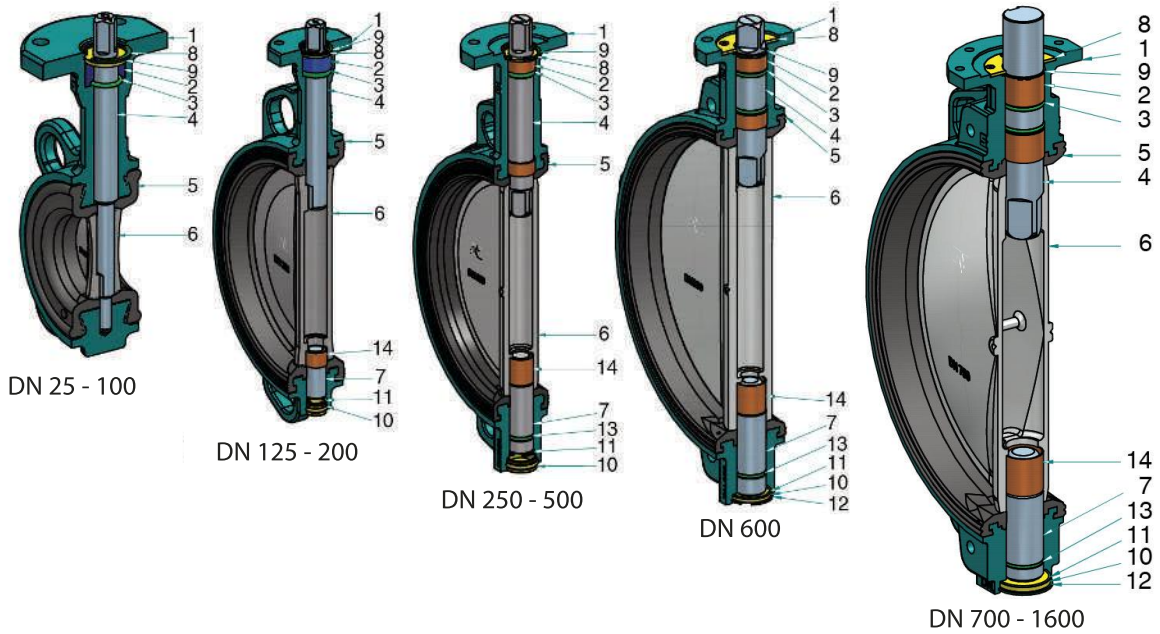

Item	Name
1	Body
2	Bush
3	O-ring
4	Shaft
5	Liner
6	Disc
7	Lower axis
8	Circlip
9	Washer
10	Plug
11	Circlip
12	O-ring
13	O-ring
14	Bush

Parts list does not apply to cast aluminium (code 0) body material

Application

- Heating systems
- Beverage industry
- Foodstuff industry
- Chemical industry
- Drinking water installations
- Processing industry
- HVAC

Product conformities

	Approved designs			Special function (code)
	Disc material	Liner material	Liner fixing	
Drinking water				
ACS (Certificate of Sanitary Conformity)	CF8M, 1.4408 (code A) CF8M, 1.4408 polished (code B) Super Duplex, 1.4469 (code D) EN-GJS-400-15 (GGG-40), epoxy coated (code E) EN-GJS-400-15, GGG40 Rilsan® PA11 coated (code R)	EPDM (code W)	All versions	A
DVGW Water	CF8M, 1.4408 (code A) CF8M, 1.4408 polished (code B)	EPDM (code W)	Loose (code L)	D
DVGW Gas	CF8M, 1.4408 (code A) CF8M, 1.4408 polished (code B)	EPDM (code J)	Loose (code L)	G
WRAS	CF8M, 1.4408 (code A) CF8M, 1.4408 polished (code B) Super Duplex, 1.4469 (code D)	EPDM (code W)	All versions	W
Foodstuffs				
FDA	CF8M, 1.4408 (code A) CF8M, 1.4408 polished (code B) Super Duplex, 1.4469 (code D)	EPDM-HT (code Z) EPDM, white (code M) NBR, white (code U) SR, white (code I)	All versions	No order code required

Other features are not relevant to product conformity.

Availability

DN	Wafer											
	Connection											
	PN 6	PN 10	PN 16	ASME B16.5 Class 150	ASME B16.47 A Class 150	AWWA	JIS 5k	JIS 10k	JIS 16k	BS 10 D	BS 10 E	AS 2129 Tab E
	Code											
25	○	3*	3*	○	-	-	○	○	○	○	○	○
32	3*	3*	3*	D	-	-	K	G	J	H	S	U
40	3*	3*	3*	D	-	-	K	G	J	○	S	U
50	○	3*	3*	D	-	-	-	G	○	H	S	○
65	3*	3*	3*	D	-	-	K	G	○	H	S	U
80	3*	3*	3*	D	-	-	K	G	J	H	S	U
100	3*	3*	3*	D	-	W	K	G	J	H	S	U
125	3*	3*	3*	D	-	W	K	G	J	H	S	U
150	3*	3*	3*	D	-	W	K	G	○	H	S	U
200	3*	3*	3*	D	-	W	K	G	J	H	S	U
250	3*	3*	3*	D	-	W	K	G	○	○	S	U
300	3*	3*	3*	D	-	W	K	○	○	H	S	U
350	○	3*	3*	D	-	W	○	G	○	H	S	U
400	○	3*	3*	D	-	W	○	G	J	○	S	○
450	○	2*	3*	D	-	W	○	G	J	H	S	U
500	○	2*	3*	D	-	W	○	G	J	○	S	○
600	○	2*	3*	D	-	W	○	G	J	○	S	○
700	-	2*	3*	○	○	○	○	G	-	-	S	○
750	-	-	-	-	E	W	K	G	J	○	○	○
800	○	2*	3*	-	E	W	○	○	J	-	○	○
900	○	2*	3*	-	E	W	○	G	J	○	S	○
1000	○	2*	3*	○	○	○	○	G	J	-	S	○
1200	○	2*	3*	○	○	○	○	G	J	○	S	-

○ = on request
* Standard

DN	Lug											
	Connection											
	PN 6	PN 10	PN 16	ASME B16.5 Class 150	ASME B16.47 A Class 150	AWWA	JIS 5k	JIS 10k	JIS 16k	BS 10 D	BS 10 E	AS 2129 Tab E
	Code											
25	1	3	3*	D	-	-	K	G	J	H	S	U
32	1	3	3*	D	-	-	K	G	J	H	S	U
40	1	3	3*	D	-	-	K	G	J	H	S	U
50	1	3	3*	D	-	-	-	G	○	H	S	U
65	1	3	3*	D	-	-	K	G	○	H	S	U
80	1	3	3*	D	-	-	K	G	J	H	S	U
100	○	3	3*	D	-	W	K	G	J	○	S	U
125	1	3	3*	D	-	W	K	G	J	H	S	U
150	1	3	3*	D	-	W	K	G	○	H	S	U
200	1	2*	3	D	-	W	K	G	J	H	S	U
250	1	2*	3	D	-	W	K	G	○	○	S	U
300	1	2*	3	D	-	W	K	○	○	H	S	U
350	1	2*	3	D	-	W	○	G	J	H	S	U
400	1	2*	3	D	-	W	K	G	J	○	○	○
450	1	2*	3	D	-	W	K	G	○	○	S	U
500	○	2*	3	D	-	W	K	G	J	○	○	○
600	○	2*	3	D	-	W	K	○	○	○	○	○
700	-	2*	3	-	-	-	K	G	-	-	-	-
750	-	-	-	-	E	W	K	G	-	-	-	-
800	○	2*	3	-	-	-	○	-	-	-	-	-
900	-	2*	3	-	-	-	-	G	-	-	-	-
1000	○	2*	3	-	-	-	○	G	-	-	-	-

○ = on request
* Standard

DN	U section											
	Connection											
	PN 6	PN 10	PN 16	ASME B16.5 Class 150	ASME B16.47 A Class 150	AWWA	JIS 5k	JIS 10k	JIS 16k	BS 10 D	BS 10 E	AS 2129 Tab E
	Code											
150	1	2*	3*	D	-	W	K	G	○	H	S	U
200	○	2*	3	D	-	W	○	G	J	H	S	U
250	1	2*	3	D	-	W	K	G	-	H	S	U
300	○	2*	3	D	-	W	○	○	J	H	S	U
350	○	2*	3	D	-	W	○	G	J	H	S	U
400	○	2*	3	D	-	W	○	G	J	○	○	○
450	○	2*	3	D	-	W	○	G	J	H	S	U
500	○	2*	3	D	-	W	K	G	J	○	○	○
600	○	2*	3	D	-	W	K	G	J	○	○	○
700	-	2*	3	○	E	W	○	G	-	-	-	○
750	-	2*	3	-	E	W	K	G	J	H	S	U
800	○	2*	3	-	E	W	K	G	J	-	-	U
900	○	2*	3	○	E	W	○	G	J	H	S	U
1000	○	2*	3	-	E	W	○	G	J	-	-	U
1200	○	2*	3	-	E	W	○	G	J	-	-	U
1400	1	2*	3	-	E	-	-	-	-	-	-	-
1600	1	2*	3	-	E	-	-	-	-	-	-	-

○ = on request
* Standard

Operating pressure correlation

DN	Operating pressure correlation			
	PS 3 bar	PS 6 bar	PS 10 bar	PS 16 bar
	Code			
25	0	1	2	3*
32	0	1	2	3*
40	0	1	2	3*
50	0	1	2	3*
65	0	1	2	3*
80	0	1	2	3*
100	0	1	2	3*
125	0	1	2	3*
150	0	1	2	3*
200	0	1	2*	3
250	0	1	2*	3
300	0	1	2*	3
350	0	1	2*	3
400	0	1	2*	3
450	0	1	2*	3
500	0	1	2*	3
600	0	1	2*	3
700	0	1	2*	3
750	0	1	2*	3
800	0	1	2*	3
900	0	1	2*	3
1000	0	1	2*	3
1200	0	1	2*	3
1400	0	1	2*	-
1600	0	1	2*	-

* Standard
On request, PN25 is available in nominal sizes DN400 to PS25 for non-hazardous media (water up to 20 °C).

Bare shaft correlation

DN	ISO	Shaft connection*	Code
25-32	F07	D	07 D11
40	F07	D	07 D11
50	F07	D	07 D11
65	F07	D	07 D11
80	F07	D	07 D11
100	F07	D	07 D11
125	F07	D	07 D14
150	F07	D	07 D14
200	F07	D	07 D17
250	F10	D	10 D22
300	F10	D	10 D22
350	F10	D	10 D22
400	F12	D	12 D27
450	F14	D	14 D36
500	F14	D	14 D36
600	F16	D	16 D46
700	F25	V	25 V65
750	F25	V	25 V80
800	F25	V	25 V80
900	F25	V	25 V80
1000	F25	V	25 V80
1200	F30	V	30 V100
1400	F30	V	30 V120
1600	F40	V	40 V160

* Indicates below the detection limit

Order data

The order data provide an overview of standard configurations.

Please check the availability before ordering. Other configurations available on request.

Products ordered with **bold marked ordering options** are so-called preferred series. Depending on the nominal size, these are available more quickly.

Order codes

1 Type	Code
Butterfly valve, bare shaft	D480

2 DN	Code
DN 25	25
DN 32	32
DN 40	40
DN 50	50
DN 65	65
DN 80	80
DN 100	100
DN 125	125
DN 150	150
DN 200	200
DN 250	250
DN 300	300
DN 350	350
DN 400	400
DN 450	450
DN 500	500
DN 600	600
DN 700	700
DN 800	800
DN 900	900
DN 1000	1T0
DN 1100	1T1
DN 1200	1T2
DN 1400	1T4
DN 1600	1T6

3 Housing configuration	Code
Intermediate flange design (wafer), face-to-face dimension FTF EN 558 series 20	W
Flange-mounted design (lug), face-to-face dimension FTF EN 558 series 20	L
Double flange design (U section), face-to-face dimension FTF EN 558, series 20	U

4 Operating pressure	Code
3 bar	0
6 bar	1
10 bar	2
16 bar	3

5 Connection type	Code
PN 6/flange EN 1092, face-to-face dimension FTF EN 558 series 20	1

5 Connection type	Code
PN 10/flange EN 1092, face-to-face dimension FTF EN 558 series 20	2
PN 16 / flange EN 1092, face-to-face dimension FTF EN 558 series 20	3
ANSI B16.5, class 150, face-to-face dimension FTF EN 558, series 20, For lug bodies/threaded holes with UNC thread (DN25 to DN 600), (1" to 24")	D
ASME B16.47 A class 150, face-to-face dimension FTF EN 558, series 20 (DN 650 to DN 1500 (26" to 60")	E
JIS 10 K, face-to-face dimension FTF EN 558, series 20	G
Flange BS 10 Tab D, face-to-face dimension FTF EN 558, series 20	H
JIS 16 K, face-to-face dimension FTF EN 558, series 20	J
JIS 5 K, face-to-face dimension FTF EN 558, series 20	K
Flange BS 10 Tab E, face-to-face dimension FTF EN 558, series 20	S
Flange AS 2129 Tab E, face-to-face dimension FTF EN 558, series 20	U
AWWA C207, face-to-face dimension FTF EN 558, series 20	W

6 Housing material	Code
Cast aluminium, EN AC 47100 (≥ DN 125), cast aluminium, EN AC 46100 (< DN 125)	0
EN-GJL-250 (GG-25), from DN 700	1
EN-GJS-400-15 (GGG-40), epoxy-coated 120 µm	2
EN-GJS-400-18-LT (GGG-40.3), epoxy coated 120 µm	3
ASTM A351/CF8M	4
ASTM A216 WCB, cast steel, epoxy coated 120 µm	5

7 Disc material	Code
1.4408	A
1.4408, polished, roughness Ra 0.6–3.2, except disc marking	B
1.4408, HALAR coated	C
1.4469, SUPER DUPLEX	D
EN-GJS-400-15 (GGG-40), epoxy coated	E
EN-GJS-400-15 (GGG-40), EPDM coated	F
Cast bronze, DIN 1705 (Rg 10), (< DN 300)	G
2.4602 Hastelloy C22	H
1.4435/ASTM A351/CF3M/AISI 316L	I
EN-GJS-400-15 (GGG-40), SBR-AB/P coated (abrasion resistant)	N
EN-GJS-400-15 (GGG-40), HALAR coated	P

7 Disc material	Code
EN-GJS-400-15 (GGG-40), NBR-AB/N coated (abrasion resistant)	Q
EN-GJS-400-15 (GGG-40), RILSAN PA11 coated	R

8 Shaft material	Code
AISI 420 / 1.4021	1
AISI 316 / 1.4401, maximum operating pressure 10 bar	2
1.4462	4
1.4542	6

9 Seat material	Code
HNBR	A
ECO	C
FKM – glass fibre reinforced	D
EPDM	E
SBR-AB/P (abrasion resistant)	F
CSM	H
NR (FDA/1935-2004 certification), white AB/W	I
NBR (DVGW Gas certification)	J
NBR-AB/N (abrasion resistant)	K
EPDM (FDA/1935-2004 certification), white	M
NBR	N
FKM +	O
FKM, white	Q
Silicone (MVQ-S, steam)	R
Silicone (MVQ)	S
NBR (FDA/1935-2004 certification), white	U
FKM	V
EPDM (ACS, WRAS, DVGW Water certification)	W
Silicone (MVQ, FDA certification)	Y
EPDM-HT (FDA/1935-2004 certification)	Z

10 Liner fixing	Code
Seat bonded into body	B
Seat loose	L
Seat vulcanized into body	V

11 Actuator flange	Code
Flange type DIN EN ISO 5211, F07	07
Flange type DIN EN ISO 5211, F10	10
Flange type DIN EN ISO 5211, F12	12
Flange type DIN EN ISO 5211, F14	14
Flange type DIN EN ISO 5211, F16	16
Flange type DIN EN ISO 5211, F25	25
Flange type DIN EN ISO 5211, F30	30

12 Shaft connection and size	Code
Square drive, diagonal, WAF 11 mm	D11
Square drive, diagonal, WAF 14 mm	D14
Square drive, diagonal, WAF 17 mm	D17
Square drive, diagonal, WAF 22 mm	D22
Square drive, diagonal, WAF 27 mm	D27
Square drive, diagonal, WAF 36 mm	D36
Square drive, diagonal, WAF 46 mm	D46

12 Shaft connection and size	Code
Shaft diameter 65 mm, 1 keyway	V65
Shaft diameter 80 mm, 1 keyway	V80
Shaft diameter 100 mm, 1 keyway	V100

13 Type of design	Code
Without	
Media-wetted area cleaned to ensure suitability for paint applications, parts sealed in plastic bag	0101
Valve free of oil and grease, media-wetted area cleaned and packed in PE bag	0107
Butterfly valve body painted with 2K epoxy paint, RAL 9005 (jet black), layer thickness 120 µm	1891
Butterfly valve body powder coated, RAL 5015, sky blue, layer thickness approx. 120 µm	1892
Butterfly valve body painted with 2K epoxy paint, RAL 5021 water blue, layer thickness 250 µm to 350 µm	1913
Butterfly valve body powder coated, RAL 1023, traffic yellow	1925
Butterfly valve body powder coated, RAL 5005, signal blue, layer thickness approx. 120 µm	1962
Butterfly valve body powder coated, RAL 9003 signal white, layer thickness approx. 120 µm	7145

14 Special version	Code
Without	
ACS certification	A
DVGW Water certification	D
DVGW Gas certification (only valid in conjunction with a suitable manual, pneumatic or motorized actuator)	G
WRAS certification	W
ATEX certification	X

Order example

Ordering option	Code	Description
1 Type	D480	Butterfly valve, bare shaft
2 DN	50	DN 50
3 Housing configuration	W	Intermediate flange design (wafer), face-to-face dimension FTF EN 558 series 20
4 Operating pressure	3	16 bar
5 Connection type	3	PN 16 / flange EN 1092, face-to-face dimension FTF EN 558 series 20
6 Housing material	2	EN-GJS-400-15 (GGG-40), epoxy-coated 120 µm
7 Disc material	A	1.4408
8 Shaft material	1	AISI 420 / 1.4021
9 Seat material	E	EPDM
10 Liner fixing	L	Seat loose
11 Actuator flange	07	Flange type DIN EN ISO 5211, F07
12 Shaft connection and size	D11	Square drive, diagonal, WAF 11 mm
13 Type of design		Without
14 Special version		Without

Technical data

Medium

Working medium: Gaseous and liquid media which have no negative impact on the physical and chemical properties of the disc and seat material.

Temperature

Media temperature:

Liner material	Temperature
HNBR (code A)	-10 to +90 °C
ECO (epichlorhydrine) (code C)	-40 to +90 °C
FPM GF (code D)	-5 to +200 °C
EPDM (code E)	-20 to +90 °C*
SBR-AB/P (code F)	-10 to +70 °C
CSM (code H)	-10 to +100 °C
NBR (DVGW Gas certification) (code J)	0 to +90 °C
NBR-AB/N (abrasion resistant) (code K)	-10 to +100 °C
EPDM (FDA certification), white (code M)	-10 to +90 °C
NBR (code N)	-10 to +90 °C
FKM + (code O)	-5 to +200 °C
Silicone (steam, red. operating pressure max. 10 bar) (code R)	-55 to +160 °C
Silicone (MVQ) (code S)	-55 to +200 °C
NBR (FDA certification), white (code U)	-10 to +90 °C
FKM (code V)	-5 to +200 °C
EPDM (ACS, WRAS, DVGW Water) (code W)	-10 to +90 °C
EPDM HT (FDA approval) (code Z)	-10 to +130 °C

* Temperature peaks of up to 120 °C are permissible for short periods.
FKM material not suitable for water/steam applications above 100 °C,
Observe Pressure/Temperature diagram.
No water hammer permissible

Ambient temperature: -40 — 70 °C

Storage temperature: -20 — 40 °C

Pressure

Operating pressure: 0 — 16 bar

For installation as end-of-line valve:

Nominal size	Max. operating pressure
DN32 - DN150	6.4
DN200 - DN600	4.0

Pressures in bar

Vacuum: Can be used up to a vacuum of 800 mbar (abs) with replaceable liner or up to a vacuum of 2 mbar (abs) with bonded liner

These values apply to room temperature and air. The values may deviate for other media and other temperatures.

Pressure rating: PN 3

PN 6

PN 10

Pressure rating: PN 16

Kv values:

DN	Opening angle							
	25°	30°	40°	50°	60°	70°	80°	90°
25/32	-	2	6	12	19	29	37	45
40	2.5	4.3	9	15	22	38	60	68
50	5	7,7	14	23	45	60	90	112
65	8,6	12,9	22	36	70	90	138	172
80	13	19	33	54	110	138	207	258
100	24	36	63	103	200	260	410	474
125	52	76	133	215	420	540	860	970
150	125	146	215	353	690	890	1420	1680
200	146	215	360	603	1120	1510	2350	2800
250	224	336	580	990	1850	3190	3700	4310
300	327	475	860	1380	2670	3490	5215	6465
350	430	645	1120	1896	3535	4395	6980	8620
400	560	775	1465	2285	4395	5600	9310	10775
450	775	1077	1980	3190	6120	7930	12700	15086
500	970	1380	2415	3965	7500	9900	15085	18965
600	1293	1895	3275	8260	10130	14225	20700	24137
700	1350	1990	3860	5980	10600	17100	25300	36000
750	1560	2125	4350	7150	11450	18400	27400	40500
800	1600	2200	4500	8200	12500	20000	29000	44000
900	1800	2300	6100	10400	17500	29000	42000	58000
1000	2500	3800	8700	13500	23000	37500	59200	80500
1200	5400	7800	12500	22600	35500	61500	82000	110500
1400	5680	8568	15256	28950	45685	85700	145800	170500
1600	6456	10952	20568	37850	59452	110325	198450	220350

Kv values in m³/h

The state Kv values refer to the design without an encapsulated disc. In the design with an encapsulated disc (material code F), the Kv value is reduced by approx. 30%.

Product conformities

Pressure Equipment Directive: 2014/68/EU

Food: FDA

Drinking water: ACS
WRAS
DVGW

Ship approval: DNV GL

Gas: DVGW

Mechanical data

Torques:

DN	Disc material (code)							
	A, B, D, E, K							
	Shut-off seal material (code)							
	E, N				A, C, D, F, H, K, R, S, V, W, Z/M/U/I/Q/Y/K/O			
	Operating pressure – PS							
	3 bar	6 bar	10 bar	16 bar	3 bar	6 bar	10 bar	16 bar
25/32	5	6	9	15	6	7	11	18
40	5	6	9	15	6	7	11	18
50	5	7	13	17	6	8	16	20
65	15	16	20	25	18	19	24	30
80	17	20	23	28	20	24	28	34
100	22	29	42	50	26	35	50	60
125	39	46	72	85	47	55	86	102
150	48	75	90	110	58	90	108	132
200	90	120	140	215	108	144	168	258
250	126	210	270	350	151	252	324	420
300	161	270	390	560	193	324	468	672
350	245	300	500	950	294	360	600	1140
400	520	600	700	1000	624	720	840	1200
450	590	1120	1450	1950	708	1344	1740	2340
500	840	1390	1800	2500	1008	1668	2160	3000
600	1000	2200	3450	3800	1200	2640	4140	4560
700	1650	3300	5000	5860	1980	3960	6000	7032
750	1800	3500	5500	6000	2160	4200	6000	7200
800	2300	4600	6500	9500	2760	5520	7800	11400
900	4700	6800	8500	11500	5640	8160	10200	13800
1000	6500	8500	11500	15000	7800	10200	13800	18000
1200	8500	12000	15500	22000	10200	14400	18600	26400
1400	14000	17000	19500	-	16800	20400	23400	-
1600	22000	26000	30000	-	26400	31200	36000	-

Torques in Nm
Torque values valid under optimal operating conditions of 20 °C and media which can be lubricated.

Torques:

DN	Disc material (code)							
	C, F, R							
	Shut-off seal material (code)							
	E, N				A, C, D, F, G, H, K, P, R, S, V, W, Z			
	Operating pressure – PS							
	3 bar	6 bar	10 bar	16 bar	3 bar	6 bar	10 bar	16 bar
25/32	6	7	11	18	7	9	13	22
40	6	7	11	18	7	9	13	22
50	6	8	16	20	7	10	19	24
65	18	19	24	30	22	23	29	36
80	20	24	28	34	24	29	33	40
100	26	35	50	60	32	42	60	72
125	47	55	86	102	56	66	104	122
150	58	90	108	132	69	108	130	158
200	108	144	168	258	130	173	202	310
250	151	252	324	420	181	302	389	504
300	193	324	468	672	232	389	562	806
350	294	360	600	1140	353	432	720	1368
400	624	720	840	1200	749	864	1008	1440
450	708	1344	1740	2340	850	1613	2088	2808
500	1008	1668	2160	3000	1210	2002	2592	3600
600	1200	2640	4140	4560	1440	3168	4968	5472
700	1980	3960	6000	7032	2376	4752	7200	8438
750	2160	4200	6000	7200	2592	5040	7200	8640
800	2760	5520	7800	11400	3312	6624	9360	13680
900	5640	8160	10200	13800	6768	9792	12240	16560
1000	7800	10200	13800	18000	9360	12240	16560	21600
1200	10200	14400	18600	26400	12240	17280	22320	31680
1400	16800	20400	23400	-	20160	24480	28080	-
1600	26400	31200	36000	-	31680	37440	43200	-

Torques in Nm
Torque values valid under optimal operating conditions of 20 °C and media which can be lubricated.

Weight:

DN	Wafer	Lug	U section
25/32	1.5	1.9	-
40	1.7	2.0	-
50	2.4	2.9	-
65	2.7	3.3	-
80	3.2	4.8	-
100	4.0	6.3	-
125	6.2	9.8	-
150	7.3	10.6	11.0
200	11.1	17.5	18.4
250	20.2	26.4	30.8
300	29.6	39.6	45.4
350	35.2	56.1	54.4
400	55.5	74.9	79.2
450	79.7	103.0	99.9
500	114.0	158.0	134.5
600	170.9	220.0	216.4
700	252.9	312.0	273.9
750	294.9	392.0	348.9
800	346.5	432.0	395.5
900	459.5	539.0	511.5
1000	580.7	690.0	704.7
1200	963.3	-	1094.0
1400	-	-	1656.0
1600	-	-	2132.0

Weights in kg

Dimensions

Actuator flange

Square drive diagonal shaft connection

Wafer: DN 25–500
Lug: DN 25–600
U section: DN 150–600

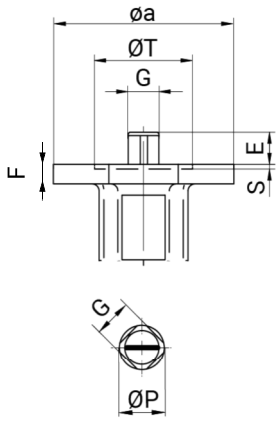

Shaft connection with single keyway

Wafer: DN 600–1200
Lug: DN 700–1000
U section: DN 700–1600

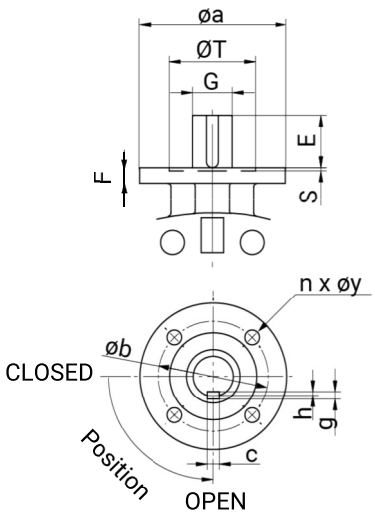

DN	ISO	Shaft connec-tion*	øa	øb	c	g	h	n x øy	E	ØP	G	S	ØT	F
25	F07	D	90.0	70.0	-	-	-	4 x 9.0	18.0	13.0	□11.0	-	-	8,0
32	F07	D	90.0	70.0	-	-	-	4 x 9.0	18.0	13.0	□11.0	-	-	8,0
40	F07	D	90.0	70.0	-	-	-	4 x 9.0	18.0	13.0	□11.0	-	-	10,0
50	F07	D	90.0	70.0	-	-	-	4 x 9.0	18.0	13.0	□11.0	-	-	10,0
65	F07	D	90.0	70.0	-	-	-	4 x 9.0	18.0	13.0	□11.0	-	-	10,0
80	F07	D	90.0	70.0	-	-	-	4 x 9.0	18.0	13.0	□11.0	-	-	10,0
100	F07	D	90.0	70.0	-	-	-	4 x 9.0	18.0	13.0	□11.0	-	-	10,0
125	F07	D	90.0	70.0	-	-	-	4 x 9.0	18.0	17.0	□14.0	-	-	12,0
150	F07	D	90.0	70.0	-	-	-	4 x 9.0	18.0	17.0	□14.0	-	-	12,0
200	F07	D	90.0	70.0	-	-	-	4 x 9.0	24.0	20.3	□17.0	-	-	12,0
250	F10	D	130.0	102.0	-	-	-	4 x 12.0	32.0	26.2	□22.0	3.0	70.0	14,0
300	F10	D	130.0	102.0	-	-	-	4 x 12.0	32.0	26.2	□22.0	3.0	70.0	14,0
350	F10	D	160.0	102.0	-	-	-	4 x 12.0	32.0	28.0	□22.0	3.0	70.0	15,0
400	F12	D	160.0	125.0	-	-	-	4 x 14.0	28.0	33.0	□27.0	4.0	85.0	18,0
450	F14	D	190.0	140.0	-	-	-	4 x 18.0	37.0	48.0	□36.0	4.0	100.0	20,0
500	F14	D	210.0	140.0	-	-	-	4 x 18.0	37.0	48.0	□36.0	4.0	100.0	20,0
600	F16	D	210.0	165.0	-	-	-	4 x 22.0	47.0	-	□46.0	5.0	130.0	24,0
700	F25	V	300.0	254.0	18.0	11.0	7.0	8 x 18.0	106.0	-	ø65.0	5.0	200.0	30,0
750	F25	V	300.0	254.0	22.0	14.0	9.0	8 x 18.0	106.0	-	ø80.0	5.0	200.0	25,0
800	F25	V	300.0	254.0	22.0	14.0	9.0	8 x 18.0	106.0	-	ø80.0	5.0	200.0	28,0
900	F25	V	350.0	254.0	22.0	14.0	9.0	8 x 18.0	110.0	-	ø80.0	5.0	200.0	32,0
1000	F25	V	350.0	254.0	22.0	14.0	9.0	8 x 18.0	110.0	-	ø80.0	5.0	200.0	32,0
1200	F30	V	350.0	298.0	28.0	16.0	10.0	8 x 23.0	110.0	-	ø100.0	5.0	230.0	40,0
1400	F30	V	350.0	298.0	32.0	18.0	11.0	8 x 23.0	120.0	-	ø120.0	5.0	230.0	-

DN	ISO	Shaft connec-tion*	øa	øb	c	g	h	n x øy	E	ØP	G	S	ØT	F
1600	F40	V	475.0	406.0	32.0	18.0	11.0	8 x 39.0	160.0	-	ø130.0	8.0	300.0	-

* Indicates below the detection limit
Dimensions in mm

Body

Wafer body configuration

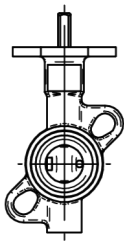

DN25/32

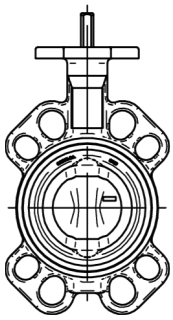

DN80

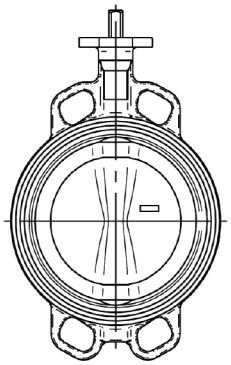

DN40/400

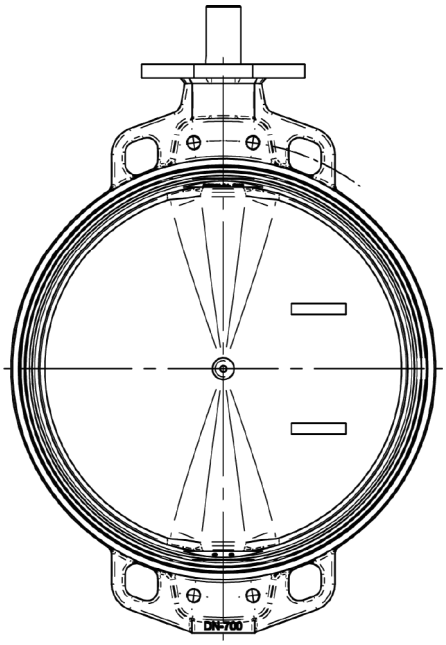

DN750-1200

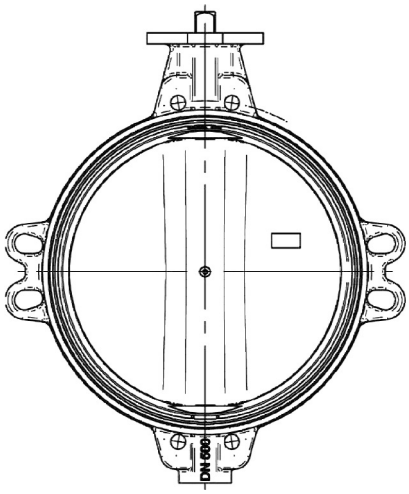

DN500/600/700

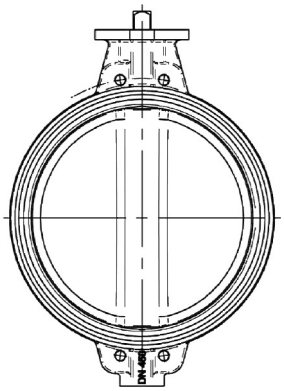

DN450

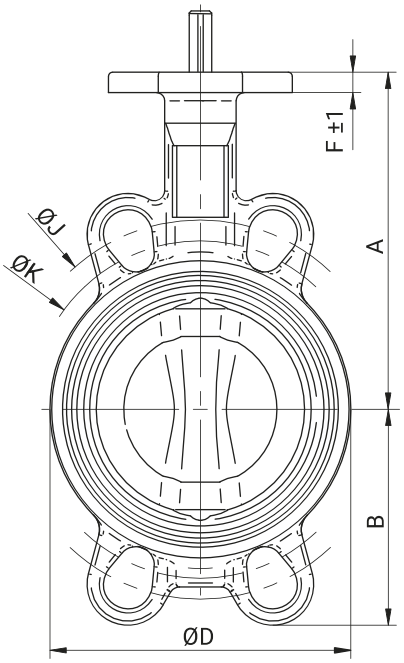

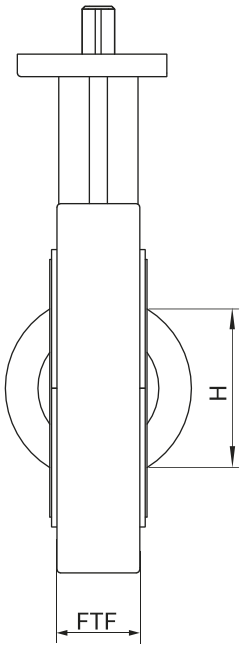

DN	ISO	A	B	ØD	F	FTF	H	ØJ	ØK
25	F07	102.5	60.2	68.0	8.0	33.0	15.0	100.0	85.0
32	F07	102.5	60.2	68.0	8.0	33.0	15.0	100.0	85.0
40	F07	110.0	56.0	76.0	10.0	33.0	26.0	110.0	95.0
50	F07	120.0	61.5	100.0	10.0	43.0	30.0	125.0	120.6
65	F07	135.0	69.0	108.0	10.0	46.0	47.0	145.0	127.0
80	F07	141.0	94.0	124.0	10.0	46.0	66.0	160.0	145.0
100	F07	165.0	106.0	147.0	10.0	52.0	90.0	185.5	165.0
125	F07	180.0	126.5	180.0	12.0	56.0	113.0	225.0	206.0
150	F07	193.0	133.0	206.0	12.0	56.0	139.0	241.3	229.0
200	F07	225.0	170.0	257.0	12.0	60.0	193.0	305.0	280.0
250	F10	282.5	210.0	324.0	14.0	68.0	241.0	362.0	335.0
300	F10	308.0	240.0	376.0	14.0	78.0	290.0	431.8	394.0
350	F10	338.5	263.0	430.0	15.0	78.0	338.0	476.3	445.0
400	F12	380.0	308.0	485.0	18.0	102.0	387.0	540.0	510.0
450	F14	380.5	340.0	536.0	20.0	114.0	437.0	-	-
500	F14	432.5	380.0	593.0	20.0	127.0	478.0	-	-
600	F16	494.0	440.0	690.0	24.0	154.0	578.0	-	-
700	F25	590.0	490.0	830.0	30.0	165.0	678.0	-	-
750	F25	590.0	530.0	836.0	25.0	190.0	703.0	-	-
800	F25	630.0	565.0	902.0	28.0	190.0	767.0	-	-
900	F25	695.0	610.0	1010.0	32.0	203.0	867.0	-	-
1000	F25	770.0	675.0	1116.0	32.0	216.0	964.0	-	-
1200	F30	875.0	818.0	1334.0	40.0	254.0	1158.0	-	-

Dimensions in mm

Lug body configuration

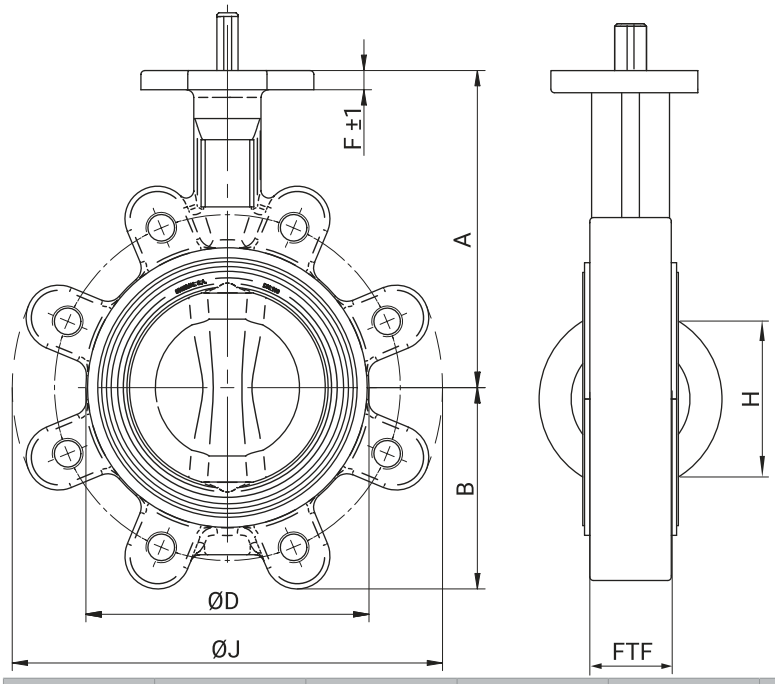

DN	ISO	A	B	ØD	F	FTF	H	ØJ
25	F07	102.5	50.4	68.0	8.0	33.0	15.0	130.0
32	F07	102.5	50.4	68.0	8.0	33.0	15.0	130.0
40	F07	110.0	54.0	76.0	10.0	33.0	26.0	140.0
50	F07	120.0	59.5	100.0	10.0	43.0	30.0	156.0
65	F07	135.0	66.5	108.0	10.0	46.0	47.0	175.0
80	F07	141.0	91.0	124.0	10.0	46.0	66.0	194.0
100	F07	165.0	105.0	147.0	10.0	52.0	90.0	224.0
125	F07	180.0	125.0	180.0	12.0	56.0	113.0	267.0
150	F07	193.0	136.5	206.0	12.0	56.0	139.0	292.0
200	F07	225.0	171.0	257.0	12.0	60.0	193.0	352.0
250	F10	282.5	210.0	324.0	14.0	68.0	241.0	409.0
300	F10	308.0	240.0	376.0	14.0	78.0	290.0	480.0
350	F10	338.5	263.0	430.0	18.0	78.0	338.0	522.0
400	F12	380.0	308.0	485.0	17.0	102.0	387.0	595.0
450	F14	380.5	340.0	536.0	20.0	114.0	437.0	633.0
500	F14	432.5	380.0	593.0	20.0	127.0	478.0	717.0
600	F16	494.0	440.0	690.0	24.0	154.0	578.0	833.0
700	F25	590.0	490.0	832.0	30.0	165.0	678.0	904.0
750	F25	590.0	530.0	836.0	25.0	190.0	703.0	964.0
800	F25	630.0	565.0	902.0	28.0	190.0	767.0	1020.0
900	F25	695.0	610.0	1010.0	32.0	203.0	867.0	1120.0
1000	F25	770.0	675.0	1116.0	32.0	216.0	964.0	1246.0

Dimensions in mm

U section body configuration

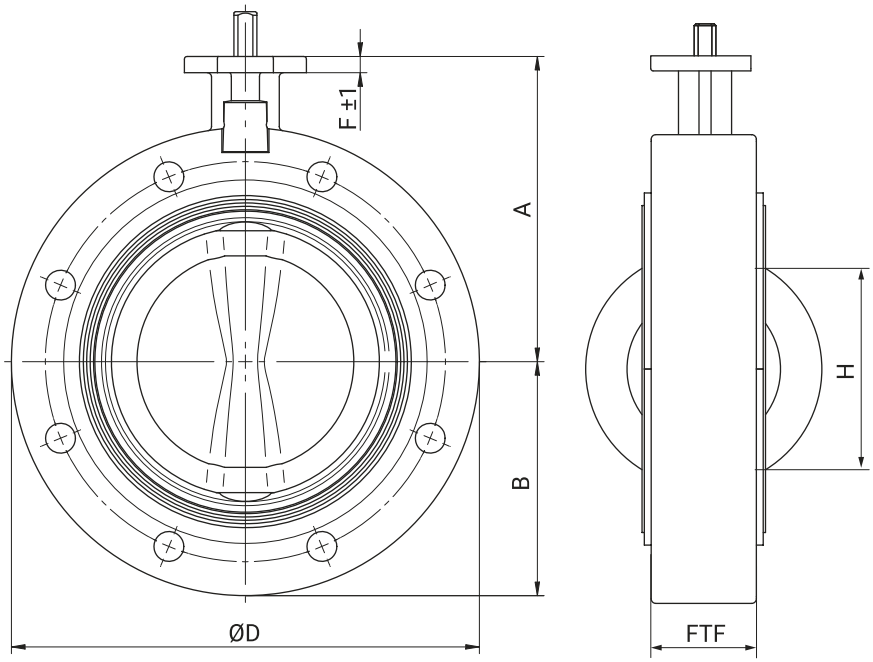

DN	ISO	A	B	ØD	F	FTF	H
150	F07	193.0	143.0	285.0	12.0	56.0	139.0
200	F07	225.0	172.5	345.0	12.0	60.0	193.0
250	F10	282.5	210.0	406.0	14.0	68.0	241.0
300	F10	308.0	240.0	480.0	14.0	78.0	290.0
350	F10	338.5	268.0	535.0	15.0	78.0	338.0
400	F12	380.0	308.0	597.0	18.0	102.0	387.0
450	F14	380.5	340.0	640.0	20.0	114.0	437.0
500	F14	432.5	380.0	700.0	20.0	127.0	478.0
600	F16	494.0	440.0	834.0	24.0	154.0	578.0
700	F25	590.0	490.0	916.0	30.0	165.0	678.0
750	F25	590.0	530.0	995.0	25.0	190.0	703.0
800	F25	630.0	565.0	1065.0	28.0	190.0	767.0
900	F25	695.0	610.0	1120.0	32.0	203.0	867.0
1000	F25	770.0	675.0	1290.0	32.0	216.0	964.0
1200	F30	875.0	818.0	1485.0	40.0	254.0	1158.0
1400	F30	1000.0	969.0	1685.0	35.0	280.0	1339.0
1600	F40	1115.0	1090.0	1930.0	40.0	318.0	1533.0

Dimensions in mm

Connection

Wafer body configuration

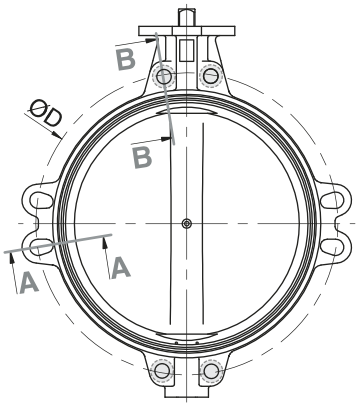

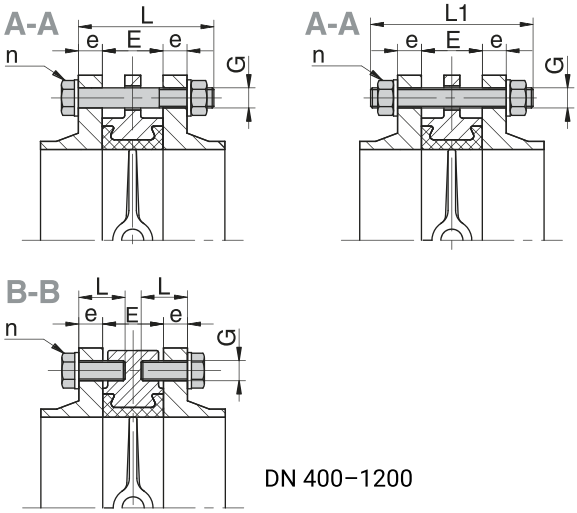

Flange holes are specially machined (finish as threaded holes) DN 400–1200

DN 400–1200

n = number of bolts

PN 10

DN	E	øD	e	L	L1	n	G
25	33.0	85.0	16.0	90.0	110.0	4	M12
32	33.0	100.0	16.0	90.0	110.0	4	M16
40	33.0	110.0	16.0	90.0	110.0	4	M16
50	43.0	125.0	18.0	100.0	120.0	4	M16
65	46.0	145.0	18.0	100.0	120.0	4	M16
80	46.0	160.0	20.0	110.0	130.0	8	M16
100	52.0	180.0	20.0	110.0	130.0	8	M16
125	56.0	210.0	22.0	120.0	140.0	8	M16
150	56.0	240.0	22.0	130.0	150.0	8	M20
200	60.0	295.0	24.0	130.0	160.0	8	M20
250	68.0	350.0	26.0	150.0	170.0	12	M20
300	78.0	400.0	26.0	160.0	180.0	12	M20
350	78.0	460.0	26.0	170.0	180.0	16	M20
400	102.0	515.0	26.0	180.0	210.0	16	M24
450	114.0	585.0	26.0	190.0	220.0	16	M24
450	114.0	585.0	26.0	60.0	-	8	M24
500	127.0	620.0	28.0	210.0	230.0	20	M24
600	154.0	725.0	28.0	240.0	270.0	20	M24
700	165.0	840.0	30.0	260.0	280.0	20	M27
700	165.0	840.0	30.0	80.0	-	8	M27
750	190.0	900.0	32.0	290.0	320.0	20	M30
750	190.0	900.0	32.0	95.0	-	8	M30
800	190.0	950.0	32.0	290.0	320.0	20	M30
800	190.0	950.0	32.0	110.0	-	8	M30
900	203.0	1050.0	34.0	310.0	350.0	24	M30
900	203.0	1050.0	34.0	100.0	-	8	M30
1000	216.0	1160.0	34.0	325.0	360.0	24	M33
1000	216.0	1160.0	34.0	95.0	-	8	M33

DN	E	øD	e	L	L1	n	G
1100	216.0	1270.0	38.0	330.0	370.0	28	M33
1100	216.0	1270.0	38.0	100.0	-	8	M33
1200	254.0	1380.0	38.0	375.0	420.0	28	M36
1200	254.0	1380.0	38.0	110.0	-	8	M36

Dimensions in mm

PN 16

DN	E	øD	e	L	L1	n	G
25	33.0	85.0	16.0	90.0	110.0	4	M12
32	33.0	100.0	16.0	90.0	110.0	4	M16
40	33.0	110.0	16.0	90.0	110.0	4	M16
50	43.0	125.0	18.0	100.0	120.0	4	M16
65	46.0	145.0	18.0	100.0	120.0	4	M16
80	46.0	160.0	20.0	110.0	130.0	8	M16
100	52.0	180.0	20.0	110.0	130.0	8	M16
125	56.0	210.0	22.0	120.0	140.0	8	M16
150	56.0	240.0	22.0	130.0	150.0	8	M20
200	60.0	295.0	24.0	130.0	160.0	12	M20
250	68.0	355.0	26.0	150.0	170.0	12	M24
300	78.0	410.0	28.0	160.0	180.0	12	M24
350	78.0	470.0	30.0	170.0	190.0	16	M24
400	102.0	525.0	32.0	200.0	220.0	16	M27
450	114.0	585.0	32.0	210.0	240.0	16	M27
450	114.0	585.0	32.0	60.0	-	8	M27
500	127.0	650.0	34.0	230.0	260.0	20	M30
600	154.0	770.0	36.0	260.0	290.0	20	M33
700	165.0	840.0	36.0	270.0	300.0	20	M33
700	165.0	840.0	36.0	85.0	-	8	M33
750	190.0	900.0	38.0	300.0	345.0	20	M33
750	190.0	900.0	38.0	100.0	-	8	M33
800	190.0	950.0	38.0	310.0	345.0	20	M36
800	190.0	950.0	38.0	100.0	-	8	M36
900	203.0	1050.0	40.0	330.0	375.0	24	M36
900	203.0	1050.0	40.0	100.0	-	8	M36
1000	216.0	1170.0	42.0	345.0	390.0	24	M39
1000	216.0	1170.0	42.0	100.0	-	8	M39
1100	216.0	1270.0	48.0	360.0	400.0	28	M39
1100	216.0	1270.0	48.0	110.0	-	8	M39
1200	254.0	1390.0	48.0	395.0	445.0	28	M45
1200	254.0	1390.0	48.0	115.0	-	8	M45

Dimensions in mm

ASME Class 150*

DN	E	øD	e	L	L1	n	G
25	33.0	79.4	14.3	85.0	105.0	4	1/2"-13 UNC
32	33.0	88.9	17.5	90.0	110.0	4	1/2"-13 UNC
40	33.0	98.4	17.5	90.0	110.0	4	1/2"-13 UNC
50	43.0	120.6	19.0	100.0	120.0	4	5/8"-11 UNC
65	46.0	139.7	22.2	110.0	130.0	4	5/8"-11 UNC
80	46.0	152.4	23.8	110.0	130.0	4	5/8"-11 UNC
100	52.0	190.5	23.8	120.0	140.0	8	5/8"-11 UNC
125	56.0	215.9	23.8	130.0	150.0	8	3/4"-10 UNC
150	56.0	241.3	25.4	130.0	150.0	8	3/4"-10 UNC
200	60.0	298.5	28.6	140.0	160.0	8	3/4"-10 UNC
250	68.0	361.9	30.2	160.0	180.0	12	7/8"- 9 UNC
300	78.0	431.8	31.7	170.0	190.0	12	7/8"- 9 UNC
350	78.0	476.2	34.9	180.0	200.0	12	1"- 8 UNC
400	102.0	539.7	36.5	210.0	230.0	16	1"- 8 UNC
450	114.0	577.8	39.7	230.0	250.0	16	1 1/8"-7 UNC
450	114.0	577.8	39.7	230.0	250.0	16	1 1/8"-7 UNC
500	127.0	635.0	46.0	250.0	280.0	20	1 1/8"-7 UNC
600	154.0	749.3	47.6	280.0	310.0	20	1 1/4"-7 UNC
700	165.0	863.5	52.5	310.0	340.0	24	1 1/4"-7 UNC
700	165.0	863.5	52.5	110.0	-	8	1 1/4"-7 UNC
750	190.0	914.4	54.0	335.0	375.0	24	1 1/4"-7 UNC
750	190.0	914.4	54.0	110.0	-	8	1 1/4"-7 UNC
800	190.0	978.0	57.0	340.0	380.0	24	1 1/2"-6 UNC
800	190.0	978.0	57.0	95.0	-	8	1 1/2"-6 UNC
900	203.0	1086.0	60.0	370.0	415.0	28	1 1/2"-6 UNC
900	203.0	1086.0	60.0	110.0	-	8	1 1/2"-6 UNC
1000	216.0	1200.0	63.5	390.0	430.0	32	1 1/2"-6 UNC
1000	216.0	1200.0	63.5	120.0	-	8	1 1/2"-6 UNC
1100	216.0	1314.5	101.0	465.0	410.0	36	1 1/2"-6 UNC
1100	216.0	1314.5	101.0	150.0	-	8	1 1/2"-6 UNC
1200	254.0	1422.0	108.0	475.0	520.0	40	1 1/2"-6 UNC
1200	254.0	1422.0	108.0	165.0	-	8	1 1/2"-6 UNC

* DN 25–600: ASME B16.5; DN 700–1200: ASME B16.47 series A
Dimensions in mm

Lug body configuration

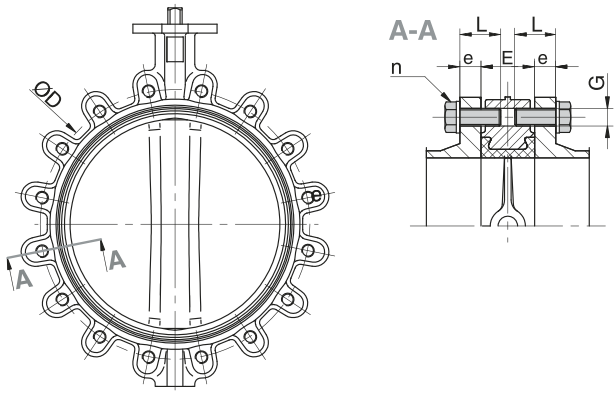

n = number of bolts

PN 10

DN	E	øD	e	L	n	G
25	33.0	85.0	16.0	30.0	8	M12
32	33.0	100.0	16.0	30.0	8	M16
40	33.0	110.0	16.0	30.0	8	M16
50	43.0	125.0	18.0	35.0	8	M16
65	46.0	145.0	18.0	40.0	8	M16
80	46.0	160.0	20.0	40.0	16	M16
100	52.0	180.0	20.0	45.0	16	M16
125	56.0	210.0	22.0	50.0	16	M16
150	56.0	240.0	22.0	50.0	16	M20
200	60.0	295.0	24.0	50.0	16	M20
250	68.0	350.0	26.0	60.0	24	M20
300	78.0	400.0	26.0	65.0	24	M20
350	78.0	460.0	26.0	65.0	32	M20
400	102.0	515.0	26.0	75.0	32	M24
450	114.0	565.0	26.0	75.0	32	M24
450	114.0	565.0	26.0	60.0	8	M24
500	127.0	620.0	28.0	90.0	40	M24
600	154.0	725.0	28.0	100.0	40	M27
700	165.0	840.0	30.0	110.0	40	M27
700	165.0	840.0	30.0	80.0	8	M27
750	190.0	900.0	32.0	130.0	40	M30
750	190.0	900.0	32.0	100.0	8	M30
800	190.0	950.0	32.0	130.0	40	M30
800	190.0	950.0	32.0	110.0	8	M30
900	203.0	1050.0	34.0	130.0	48	M30
900	203.0	1050.0	34.0	95.0	8	M30
1000	216.0	1160.0	34.0	140.0	48	M33
1000	216.0	1160.0	34.0	95.0	8	M33

Dimensions in mm

PN 16

DN	E	øD	e	L	n	G
25	33.0	85.0	16.0	30.0	8	M12
32	33.0	100.0	16.0	30.0	8	M16
40	33.0	110.0	16.0	30.0	8	M16
50	43.0	125.0	18.0	35.0	8	M16
65	46.0	145.0	18.0	40.0	8	M16
80	46.0	160.0	20.0	40.0	16	M16
100	52.0	180.0	20.0	45.0	16	M16
125	56.0	210.0	22.0	50.0	16	M16
150	56.0	240.0	22.0	50.0	16	M20
200	60.0	295.0	24.0	50.0	24	M20
250	68.0	355.0	26.0	60.0	24	M24
300	78.0	410.0	28.0	65.0	24	M24
350	78.0	470.0	30.0	65.0	32	M24
400	102.0	525.0	32.0	80.0	32	M27
450	114.0	585.0	32.0	80.0	32	M27
450	114.0	585.0	32.0	60.0	8	M27
500	127.0	650.0	34.0	65.0	40	M30
600	154.0	770.0	36.0	110.0	40	M33
700	165.0	840.0	36.0	120.0	40	M33
700	165.0	840.0	36.0	85.0	8	M33
750	190.0	900.0	38.0	130.0	40	M33
750	190.0	900.0	38.0	100.0	8	M33
800	190.0	950.0	38.0	130.0	40	M36
800	190.0	950.0	38.0	110.0	8	M36
900	203.0	1050.0	40.0	140.0	48	M36
900	203.0	1050.0	40.0	100.0	8	M36
1000	216.0	1170.0	42.0	150.0	48	M39
1000	216.0	1170.0	42.0	100.0	8	M39

Dimensions in mm

ASME B16.5 Class 150

DN	E	øD	e	L	n	G
25	33.0	79.4	14.3	30.0	8	1/2"-13 UNC
32	33.0	88.9	17.5	30.0	8	1/2"-13 UNC
40	33.0	98.4	17.5	30.0	8	1/2"-13 UNC
50	43.0	120.6	19.0	35.0	8	5/8"-11 UNC
65	46.0	139.7	22.2	45.0	8	5/8"-11 UNC
80	46.0	152.4	23.8	45.0	8	5/8"-11 UNC
100	52.0	190.5	23.8	45.0	16	5/8"-11 UNC
125	56.0	215.9	23.8	50.0	16	3/4"-10 UNC
150	56.0	241.3	25.4	50.0	16	3/4"-10 UNC
200	60.0	298.5	28.6	55.0	16	3/4"-10 UNC
250	68.0	361.9	30.2	60.0	24	7/8"- 9 UNC
300	78.0	431.8	31.7	70.0	24	7/8"- 9 UNC
350	78.0	476.2	34.9	70.0	24	1"- 8 UNC
400	102.0	539.7	36.5	85.0	32	1"- 8 UNC
450	114.0	577.8	39.5	85.0	32	1 1/8"- 7 UNC
450	114.0	577.8	39.5	85.0	32	1 1/8"- 7 UNC
500	127.0	635.0	46.0	105.0	40	1 1/8"- 7 UNC
600	154.0	749.3	47.6	120.0	40	1 1/4"- 7 UNC
700	165.0	863.5	-	-	-	-
700	165.0	863.5	-	-	-	-
750	190.0	914.4	54.0	150.0	48	1 1/4"- 7 UNC
750	190.0	914.4	54.0	110.0	8	1 1/4"- 7 UNC
800	190.0	-	-	-	-	-
800	190.0	-	-	-	-	-
900	203.0	-	-	-	-	-
900	203.0	-	-	-	-	-
1000	216.0	-	-	-	-	-
1000	216.0	-	-	-	-	-

Dimensions in mm

U section body configuration

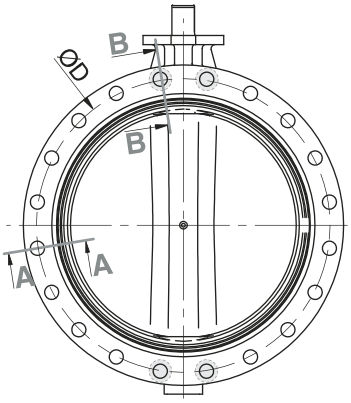

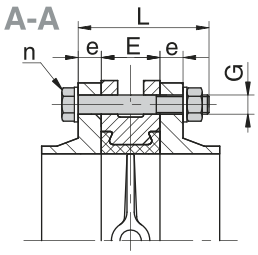

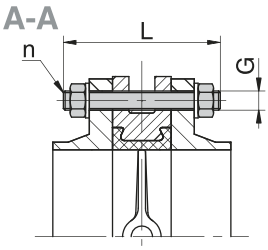

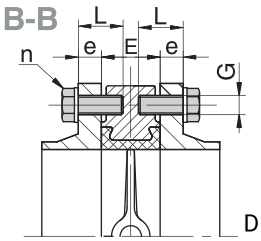

DN 450, 700–1600

Flange holes are specially machined (finish as threaded holes) DN 450, DN 700–1600

n = number of bolts

PN 10

DN	E	øD	e	L	L1	n	G
150	56.0	240.0	22.0	130.0	150.0	8	M20
200	60.0	295.0	24.0	130.0	160.0	8	M20
250	68.0	350.0	26.0	150.0	170.0	12	M20
300	78.0	400.0	26.0	160.0	180.0	12	M20
350	78.0	460.0	26.0	170.0	180.0	16	M20
400	102.0	515.0	26.0	180.0	210.0	16	M24
450	114.0	565.0	26.0	190.0	220.0	16	M24
450	114.0	565.0	26.0	60.0	220.0	8	M24
500	127.0	620.0	28.0	210.0	230.0	20	M24
600	154.0	725.0	28.0	240.0	270.0	20	M27
700	165.0	840.0	30.0	260.0	280.0	20	M27
700	165.0	840.0	30.0	80.0	280.0	8	M27
750	190.0	900.0	32.0	290.0	320.0	20	M30
750	190.0	900.0	32.0	95.0	320.0	8	M30
800	190.0	950.0	32.0	290.0	320.0	20	M30
800	190.0	950.0	32.0	110.0	320.0	8	M30
900	203.0	1050.0	34.0	310.0	350.0	24	M30
900	203.0	1050.0	34.0	100.0	350.0	8	M30
1000	216.0	1160.0	34.0	325.0	360.0	24	M33
1000	216.0	1160.0	34.0	95.0	360.0	8	M33
1100	216.0	1270.0	38.0	330.0	370.0	28	M33
1100	216.0	1270.0	38.0	100.0	370.0	8	M33
1200	254.0	1380.0	38.0	375.0	420.0	28	M36
1200	254.0	1380.0	38.0	110.0	420.0	8	M36
1400	280.0	1590.0	42.0	410.0	450.0	32	M39
1400	280.0	1590.0	42.0	120.0	450.0	8	M39
1600	318.0	1820.0	46.0	460.0	510.0	36	M45

DN	E	øD	e	L	L1	n	G
1600	318.0	1820.0	46.0	110.0	510.0	8	M45

Dimensions in mm

PN 16

DN	E	øD	e	L	L1	n	G
150	56.0	240.0	22.0	130.0	150.0	8	M20
200	60.0	295.0	24.0	130.0	160.0	12	M20
250	68.0	355.0	26.0	150.0	170.0	12	M24
300	78.0	410.0	28.0	160.0	180.0	12	M24
350	78.0	470.0	30.0	170.0	190.0	16	M24
400	102.0	525.0	32.0	200.0	220.0	16	M27
450	114.0	585.0	32.0	210.0	240.0	16	M27
450	114.0	585.0	32.0	60.0	240.0	8	M27
500	127.0	650.0	34.0	230.0	260.0	20	M30
600	154.0	770.0	36.0	260.0	290.0	20	M33
700	165.0	840.0	36.0	270.0	300.0	20	M33
700	165.0	840.0	36.0	85.0	300.0	8	M33
750	190.0	900.0	38.0	300.0	340.0	20	M33
750	190.0	900.0	38.0	100.0	340.0	8	M33
800	190.0	950.0	38.0	310.0	345.0	20	M36
800	190.0	950.0	38.0	80.0	345.0	8	M36
900	203.0	1070.0	40.0	330.0	375.0	24	M36
900	203.0	1070.0	40.0	100.0	375.0	8	M36
1000	216.0	1160.0	42.0	345.0	390.0	24	M39
1000	216.0	1160.0	42.0	100.0	390.0	8	M39
1100	216.0	1270.0	48.0	360.0	400.0	28	M39
1100	216.0	1270.0	48.0	110.0	400.0	8	M39
1200	254.0	1390.0	48.0	395.0	445.0	28	M45
1200	254.0	1390.0	48.0	115.0	445.0	8	M45
1400	280.0	1590.0	52.0	440.0	490.0	32	M45
1400	280.0	1590.0	52.0	120.0	490.0	8	M45
1600	318.0	1820.0	58.0	470.0	530.0	36	M52
1600	318.0	1820.0	58.0	120.0	530.0	8	M52

Dimensions in mm

ASME Class 150*

DN	E	øD	e	L	L1	n	G
150	56.0	241.3	25.4	130.0	150.0	8	3/4"-10 UNC
200	60.0	298.5	28.6	140.0	160.0	8	3/4"-10 UNC
250	68.0	361.9	30.2	160.0	180.0	12	7/8"- 9 UNC
300	78.0	431.8	31.7	170.0	190.0	12	7/8"- 9 UNC
350	78.0	476.2	34.9	180.0	200.0	12	1"- 8 UNC
400	102.0	539.7	36.5	210.0	230.0	16	1"- 8 UNC
450	114.0	577.8	39.7	230.0	250.0	16	1 1/8"-7 UNC
450	114.0	577.8	39.7	230.0	250.0	16	1 1/8"-7 UNC
500	127.0	635.0	46.0	250.0	280.0	20	1 1/8"-7 UNC
600	154.0	749.3	47.6	280.0	310.0	20	1 1/4"-7 UNC
700	165.0	863.5	52.5	310.0	340.0	24	1 1/4"-7 UNC
700	165.0	863.5	52.5	110.0	340.0	8	1 1/4"-7 UNC
750	190.0	914.4	54.0	335.0	375.0	24	1 1/4"-7 UNC
750	190.0	914.4	54.0	110.0	375.0	8	1 1/4"-7 UNC
800	190.0	978.0	57.0	340.0	380.0	24	1 1/2"-6 UNC
800	190.0	978.0	57.0	95.0	380.0	8	1 1/2"-6 UNC
900	203.0	1086.0	60.0	370.0	415.0	28	1 1/2"-6 UNC
900	203.0	1086.0	60.0	110.0	415.0	8	1 1/2"-6 UNC
1000	216.0	1200.0	63.5	390.0	430.0	32	1 1/2"-6 UNC
1000	216.0	1200.0	63.5	120.0	430.0	8	1 1/2"-6 UNC
1100	216.0	1314.5	101.0	465.0	410.0	36	1 1/2"-6 UNC
1100	216.0	1314.5	101.0	150.0	410.0	8	1 1/2"-6 UNC
1200	254.0	1422.0	108.0	475.0	520.0	40	1 1/2"-6 UNC
1200	254.0	1422.0	108.0	165.0	520.0	8	1 1/2"-6 UNC
1400	280.0	1651.0	124.0	580.0	630.0	44	1 3/4"-5 UNC
1400	280.0	1651.0	124.0	160.0	630.0	8	1 3/4"-5 UNC
1600	318.0	-	-	-	-	-	-
1600	318.0	-	-	-	-	-	-

Dimensions in mm
* DN 25–600: ASME B16.5; DN 700–1200: ASME B16.47 series A

Certificates

Certificate	Standard	Item number
2.1 Certificate of compliance with the order	EN 10204	88039442
2.2 Functionality	EN 10204/EN 12266-2 F20	88439527
2.2 Pressure test	EN 10204, DIN EN 12266 P10, P11, P12	88039443
3.1 Body material	EN 10204	88348926
3.1 Disc material	EN 10204	88348927
3.1 Pressure test	DIN EN 12266 P10, P11, P12	88348929
3.1 Disc material measurement of surface roughness		88094384

Add-on components

GEMÜ GDR/GSR/GDL/GSL

Pneumatic basic quarter turn actuators

The GEMÜ GSR and GEMÜ GDR pneumatic basic actuators are clockwise rotation quarter turn actuators for open/close applications, GEMÜ GSL and GEMÜ GDL are anticlockwise rotation actuators. The actuators are available in single-acting versions (GEMÜ GSR, GEMÜ GSL) or double-acting versions (GEMÜ GDR, GEMÜ GDL). With their standardized connection for pilot valves, position feedback according to NAMUR VDI/VDE 3845, and flanged connection according to ISO 5211, they are suitable for fitting to butterfly valves and ball valves.

GEMÜ 9428

Motorized quarter turn actuator

The product is a motorized quarter turn actuator. The actuator is designed for DC or AC operating voltages. A manual override and an optical position indicator are integrated as standard. The torque in the end positions is increased. This enables a closing curve matched to the valves.

GEMÜ 9468

Motorized quarter turn actuator

GEMÜ 9468 is a motorized quarter turn actuator. A manual override and an optical position indicator are integrated as standard. The torque in the end positions is increased. This enables a closing curve matched to the valves.

GEMÜ J4C

Motorized quarter turn actuator

The J4C actuator is a motorized quarter turn actuator. The motor is designed for DC and AC operating voltages. A manual override and an optical position indicator are integrated as standard. The end positions are potential-free and adjustable.

GEMÜ PF

AUMA Profox

GEMÜ PF is a robust and compact motorized quarter turn actuator. It is suitable for use in outdoor areas due to its corrosion-resistant aluminium housing in corrosion protection class C5. The flanged connection in accordance with DIN EN ISO 5211 enables flexible mounting on butterfly valves and ball valves. A manual override and an optical position indicator are integrated as standard.

GEMÜ AQ

Motorized quarter turn actuator

GEMÜ AQ is a robust, motorized quarter turn actuator. It is suitable for use in outdoor areas due to its corrosion-resistant aluminium housing in corrosion protection class C5. The flanged connection in accordance with DIN EN ISO 5211 enables flexible mounting on butterfly valves and ball valves. A manual override and an optical position indicator are integrated as standard.

GEMÜ DAHL / SAHL / GHL / VHL

Hand lever

Lockable aluminium or stainless steel hand lever with standard flange acc. to EN ISO 5211 for manual operation (latch positions or continuous) of butterfly valves.

GEMÜ GB232

Manual operator GB232

Handwheel with gearbox made of aluminium diecasting, GG25 or stainless steel with standard flange acc. to EN ISO 5211 for the manual operation of quarter turn valves. Option with chain wheel or prepared for limit switches.

Accessories

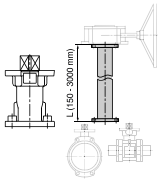

GEMÜ RC0

Shaft extension

The RC0 shaft extension for quarter turn valves is a distance piece between manually, pneumatically or electrically operated valves. This means that valves can be protected from flooding or better access for operation of the valve can be ensured (also for manual override).

GEMÜ MSC

Mounting kit

The MSC mounting kit is an interface, for the same and different ends, to join flange designs according to ISO 5211. This mounting kit ensures thermal separation of actuator and valve body. It can also be used as height compensation for insulated pipelines. The mounting kit is available in steel, electrogalvanized and stainless steel in an open or closed design.

GEMÜ MSC refers to mounting kits for ADA, ASR, DR and SC pneumatic actuators. The mounting kits contain different parts depending on the butterfly valve actuator configuration. Fixing screws are not included.

GEMÜ ADH

Mounting sleeve

The mounting sleeve accessories are available in the square and star geometry designs. These are used for the shaft and hub support for quarter turn actuators. Both sleeves have an internal square drive (please observe stated measurement dimensions here). The sleeve material is sintered metal and they are chemically nickel plated with a surface of 25 µm.

TÜVRheinland® CERT ISO 14001

TÜVRheinland® CERT ISO 9001

Subject to alteration | 01.2026 | 88935705